# MOBILE DUST COLLECTION CART

Dust collection is a critical tool to have in a woodshop not only to keep your space clean but most importantly to keep us safe from not breathing in sawdust generated from our tools. A mobile dust collection cart that incorporates a shop vacuum and a dust separator / cyclone is a fantastic addition to any small or large shop, even if it already has a large stationary dust collection system installed. The convenience of rolling your entire system over to a work table where you're sanding or cleaning out a car, having your hoses and attachments all within arms length, will add efficiency to any shop. Please share your photos of your project on Instagram and tag @dellsdiy so I can see your creations. As always, thank you so much for your support and I can't wait to see your completed projects!

Copyright 2021, Dell's DIY

# Materials and Supplies

| Item | QTY | Product Link Available |
|---|---|---|
| ¾” Plywood 4’x8’ sheet | 1 | |
| ½” Plywood 4’x8’ sheet | <1/4 | |
| ¼” Plywood 4’8’sheet | <1/4 | |
| 2” Casters | 4 | YES |
| Countersink Bit (good) | 1 | YES |
| Countersink Bit (Best) | | YES |
| Wood Glue | 1 | YES |
| Pocket Hole Jig | 1 | YES |
| Pocket Hole Screws | | YES |
| 1 ¼” Wood Screws | | |
| 18” Full Extension Drawer Slides | 2 | YES |
| Drawer Handle | 1 | |
| | | |
| Optional Accessories and Tools | | |
| Automated Vacuum Switch | 1 | YES |
| Metal 4 Plug Power Block | 1 | YES |
| Remote Control Outlet | 1 | YES |
| Rockler Corner Clamping Jig | 2-4 | YES |
| Kreg Corner Clamp | 1-2 | YES |
| Drawer Slide Jig | 1 | YES |
| 10” Dual Bevel Miter Saw (Amazing!) | | YES |
| Heavy Duty Hose Wraps | | YES |

Product Links are available on the Project post on my website HERE

Click Here for full Dust Collection Cart Build Video

Check out our other plans at www.dellsdiy.com

If you like these plans, the greatest support you can give me is to Subscribe to my YouTube Channel, follow me on Instagram @dellsdiy, and use my affiliate links which, as an Amazon Associate, I earn a small commission from qualifying purchases with no additional cost to you to help me continue to make great content.

# 3/4" Plywood Parts List / 4'x8' Sheet Layout

## Dust Collection Cart

dellsdiy.com @dellsdiy | SCALE 1:15 | DIMENSIONS: Inches | SHEET 3/20

| PARTS LIST | | | |
|---|---|---|---|
| ITEM | QTY | PART NAME | DESCRIPTION |
| 1 | 1 | BACK BOARD | BACK SIDE OF CART |
| 2 | 2 | SIDE BOARD | LEFT AND RIGHT SIDE OF CART. |
| 3 | 1 | BASE | BASE OF CART |
| 4 | 1 | TOP SHELF | SHELF WHERE DUST COLLECTOR SITS |
| 5 | 1 | FRONT PANEL | SHELF SUPPORT PANEL |
| 6 | 1 | DRAWER FACE | DRAWER FACE IS 1/16" SHORTER THAN FRONT PANEL TO ALLOW DRAWER TO OPEN AND CLOSE |

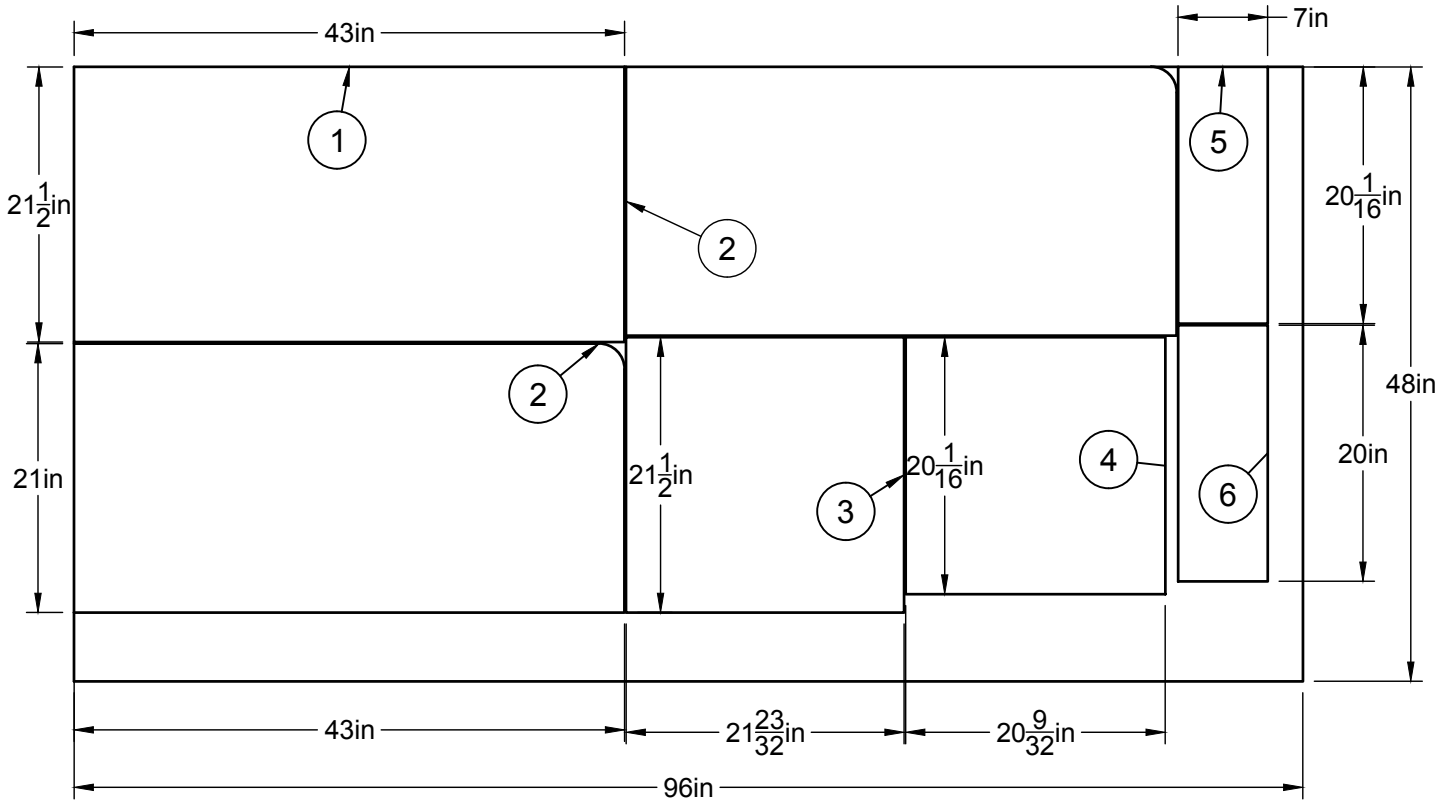


Note: Actual thickness of most $\frac{3}{4}$" plywood is $\frac{23}{32}$" which causes some interior dimensions or butt joints to require pieces needing to be cut to 32nds instead of 16ths. If your plywood is actually $\frac{3}{4}$" you may need to adjust a couple cuts to accomodate

**Copyright 2021, Dell's DIY**

# 1/2" Plywood Parts List / 4'x8' Sheet Layout

## Dust Collection Cart

dellsdiy.com @dellsdiy | SCALE 1:15 | DIMENSIONS: Inches | SHEET 4/20

Note: Big box stores sell quarter sheets of precut plywood which will work great for this since not much material is needed. If you don't have $\frac{1}{4}$" plywood for the drawer bottom, use the leftover of this quarter sheet of $\frac{1}{2}$" ply as substitute.

| PARTS LIST | | | |
|---|---|---|---|
| ITEM | QTY | PART NAME | DESCRIPTION |
| 7 | 2 | DRAWER SIDE | LEFT/RIGHT DRAWER SIDES |
| 8 | 2 | DRAWER FRONT/BACK | FRONT / BACK DRAWER SIDES |

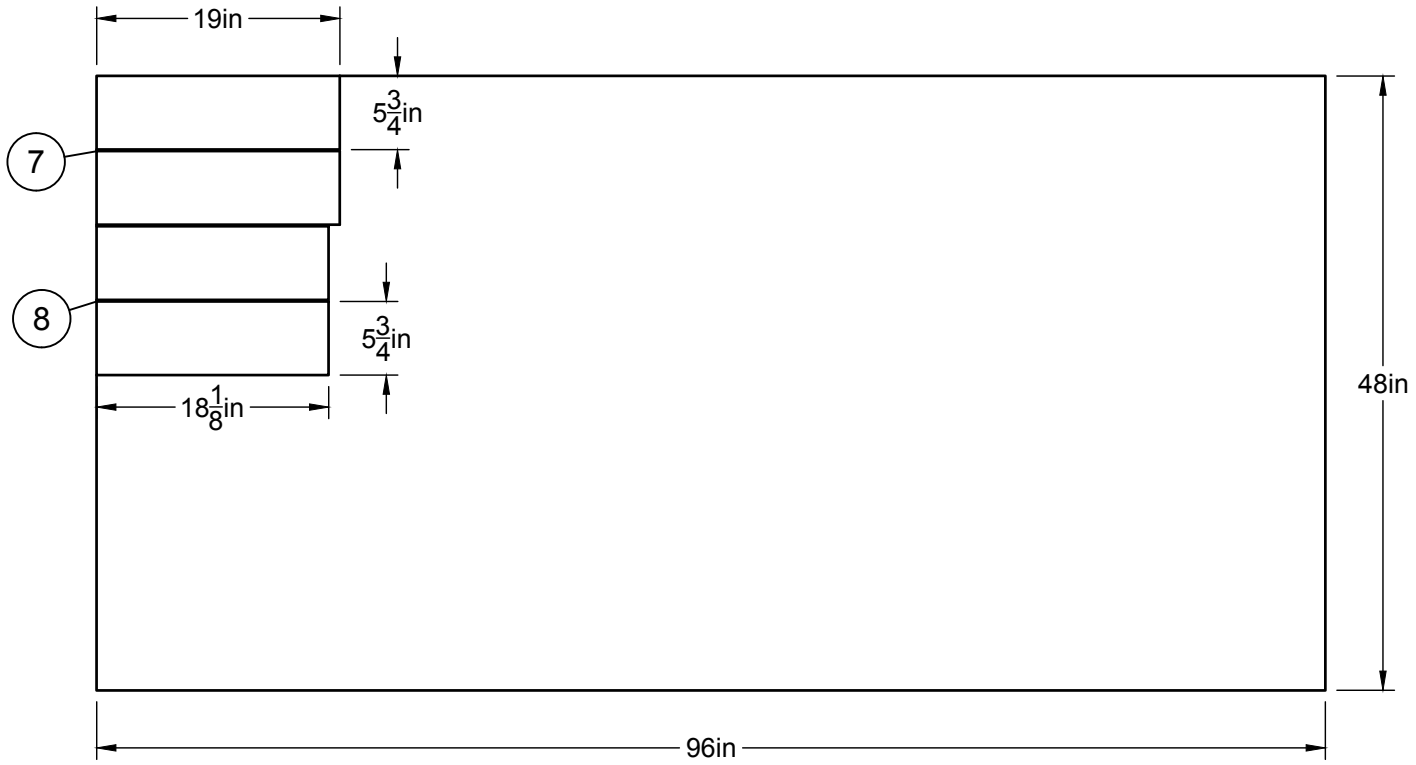


Quick Tip:
A couple factors determine the dimensions of the drawers. Dimensions for drawer may have to be adjusted for your situation. **We recommend cutting drawers after the cart carcass is assembled, and taking measurements to account for different thicknesses of plywood or assembly differences.**

1. Standard drawer slides are $\frac{1}{2}$" thick (x 2 for both sides)
2. Thickness of your plywood. $\frac{1}{2}$" plywood is actually $\frac{15}{32}$" thick.

To calculate the drawer width needed to fit your interior opening (if different from my plans), take your total width of the cart - (2x your cart side board thickness)-(2x your drawer slide thickness). This gives your interior dimensions including the width of your slides for a perfect fit.

**Copyright 2021, Dell's DIY**

# 1/4" Plywood Parts List / 4'x8' Sheet Layout

## Dust Collection Cart

dellsdiy.com @dellsdiy | SCALE 1:15 | DIMENSIONS: Inches | SHEET 5/20

| PARTS LIST | | | |
|---|---|---|---|
| ITEM | QTY | PART NAME | DESCRIPTION |
| 9 | 1 | DRAWER BOTTOM | 1/4" INCH PLYWOOD BUT CAN SUBSTITUTE WITH 1/2" |

We recommend cutting drawers after the cart carcass is assembled and taking measurements to account for different thicknesses of plywood or assembly differences.

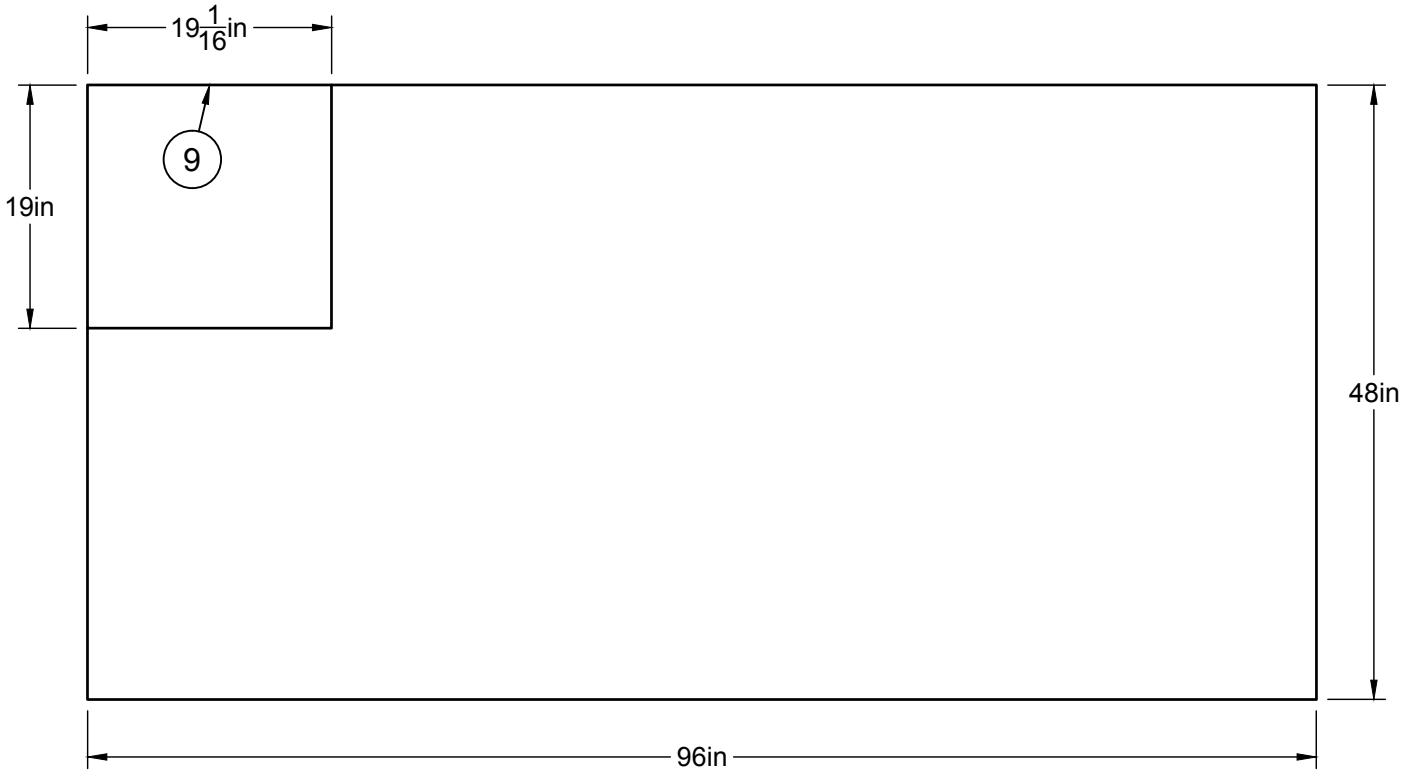


Copyright 2021, Dell's DIY

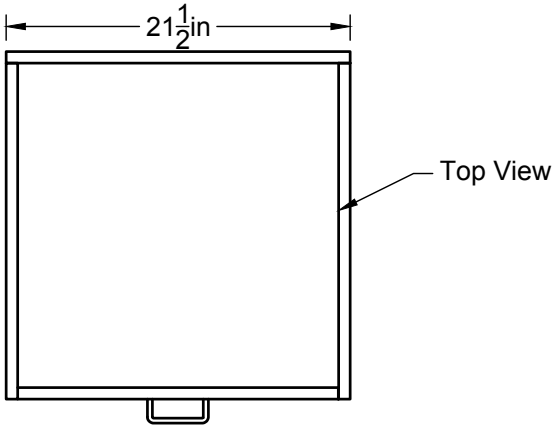


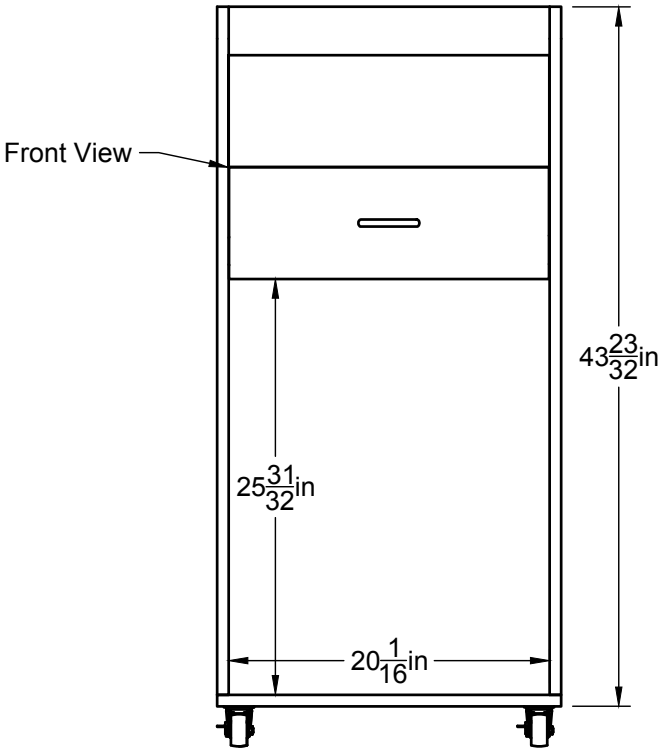


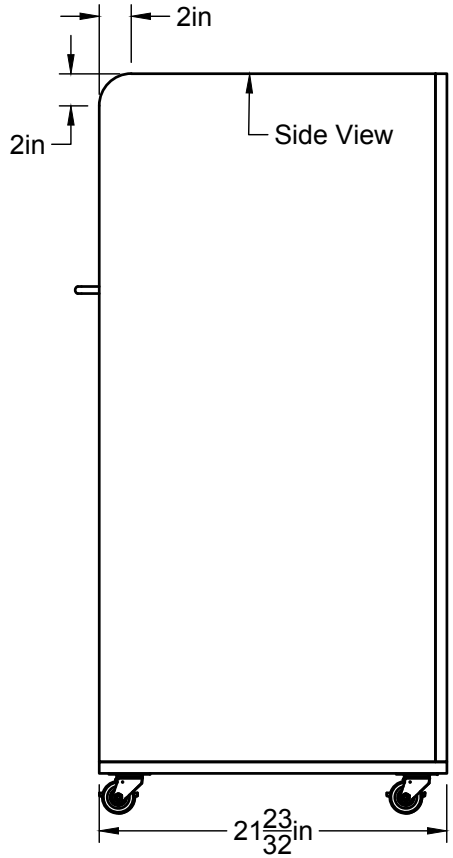

DELL'S DIY
INSPIRE • DESIGN • CREATE

dellsdiy.com @dellsdiy

# Assembled Views

## Dust Collection Cart

SCALE 1:12 DIMENSIONS: Inches SHEET 6/20

Copyright 2021, Dell's DIY

| PARTS LIST | | |
|---|---|---|
| ITEM | PART NAME | DESCRIPTION |
| 1 | BACK BOARD | BACK SIDE OF CART |
| 2 | SIDE BOARD | LEFT AND RIGHT SIDE OF CART. |
| 3 | BASE | BASE OF CART |
| 4 | TOP SHELF | SHELF WHERE DUST COLLECTOR SITS |
| 5 | FRONT PANEL | SHELF SUPPORT PANEL |

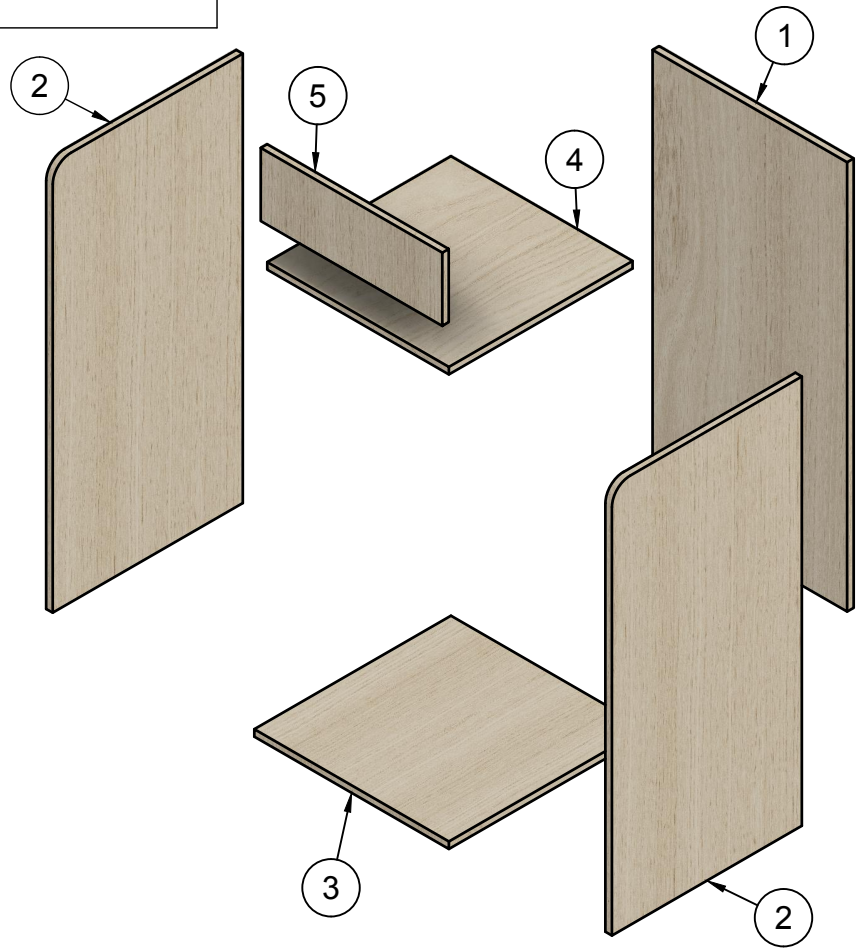


DELL'S DIY
INSPIRE • DESIGN • CREATE

# Full Assembly Exploded View

## Dust Collection Cart

dellsdiy.com @dellsdiy

SCALE 1:12 DIMENSIONS: Inches SHEET 7/20

Copyright 2021, Dell's DIY

**Step 1:** Cut out parts from $\frac{3}{4}$" sheet of plywood using the parts list and 4'x8' sheet layout as your reference.

**Step 2:** The two sides have a small radius cut out on the top front corners. Measuring 2 inches down and 2 inches across, connect the two marks by tracing something circular like a roll of tape, can of stain, spray paint can, etc. See detail A

Using a Jigsaw, cut along the line to create the rounded corner. Complete for both sides.

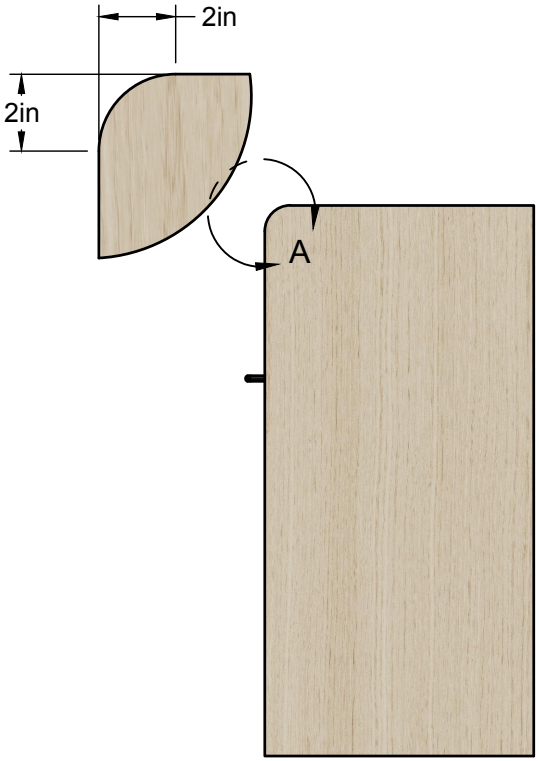


**Step 3:** The two sides will attach to the face of the back board (not to the edge of the back board). It is important that the sides are square 90 degrees to the back by using corner clamps, framing square, carpenters square, etc. If not square, you will run into problems installing the drawer

To attach, drill countersunk holes (see following page for details) on the back side of the back board every 6-8 inches and use 1 $\frac{1}{4}$" wood screws through the back and into the sides edges. I also applied wood glue (Tightbond 2) to the edges of the side boards to ensure a solid joint.

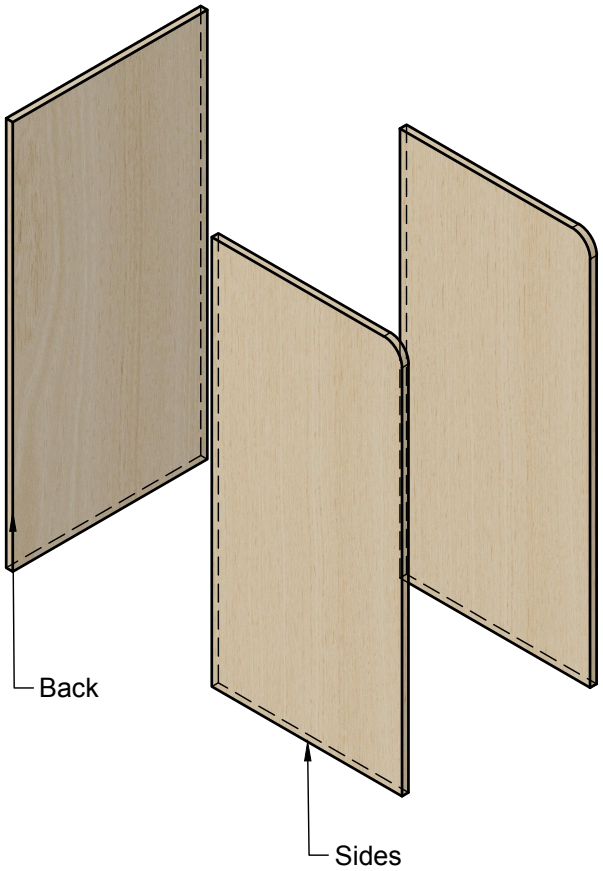


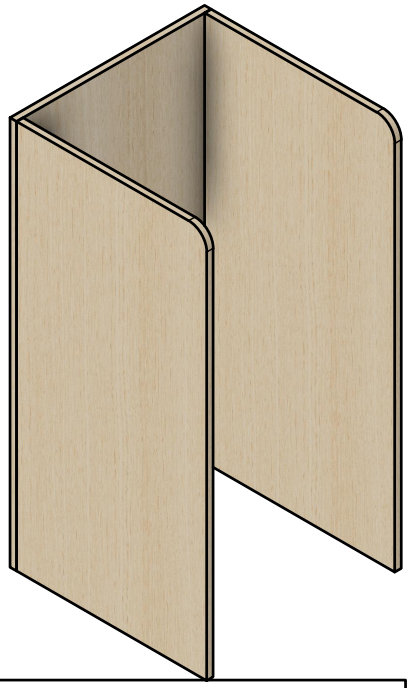

| | |
|---|---|
| DELL'S DIY INSPIRE • DESIGN • CREATE | Assemble the Sides and Back |
| | Dust Collection Cart |
| dellsdiy.com @dellsdiy | SCALE 1:15 DIMENSIONS: Inches SHEET 8/20 |

Copyright 2021, Dell's DIY

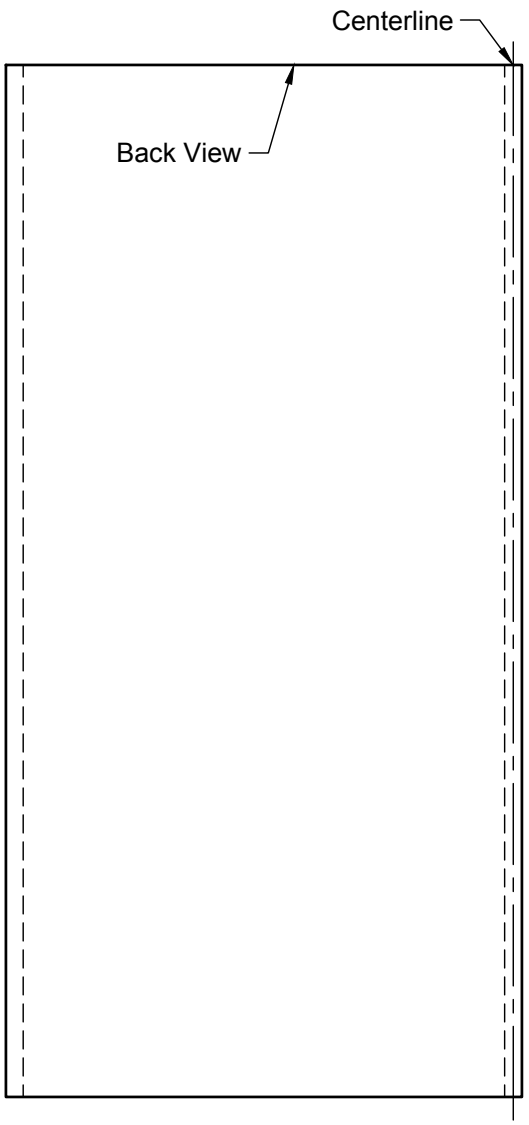

Countersink Bits

Countersinking screws is the process of enlarging the rim of the pilot hole so that the head of the screw sits flush or just below the wood's surface.

Using a countersink bit that also includes the pilot hole drill bit is useful as it drills a pilot hole which keeps the screw from splitting your boards and creates the larger rim hole to countersink the screw head simultaneously.

You'll want to drill your countersink holes as close to the center of your side board width as possible. One way to do this is to measure and mark the width of your side board on the back and then make a centerline from that line to the edge. You can also estimate the center by marking $\frac{3}{8}$" in from the edge

Place screws about every 6-8" top to bottom on each side

| | |
|---|---|
| DELL'S DIY INSPIRE • DESIGN • CREATE | Assemble the Sides and Back-Countersinking |
| | Dust Collection Cart |
| dellsdiy.com @dellsdiy | SCALE 1:12 DIMENSIONS: Inches SHEET 9/20 |

Copyright 2021, Dell's DIY

**Step 4:** Turn the assembly upside down and attach the base using glue, countersunk holes, and 1 $\frac{1}{4}$" wood screws. 4 screws on each side should do.

The 21 $\frac{1}{2}$" long side of the base goes along the back. Recheck that the sides are still square with the back board.

**Step 5:** While the assembly is still upside down, now is a good time to install the four casters.

Since casters are different sizes, I chose to locate mine so the brake lever didn't stick out past the side of the base to avoid tripping on them. Install yours as you like.

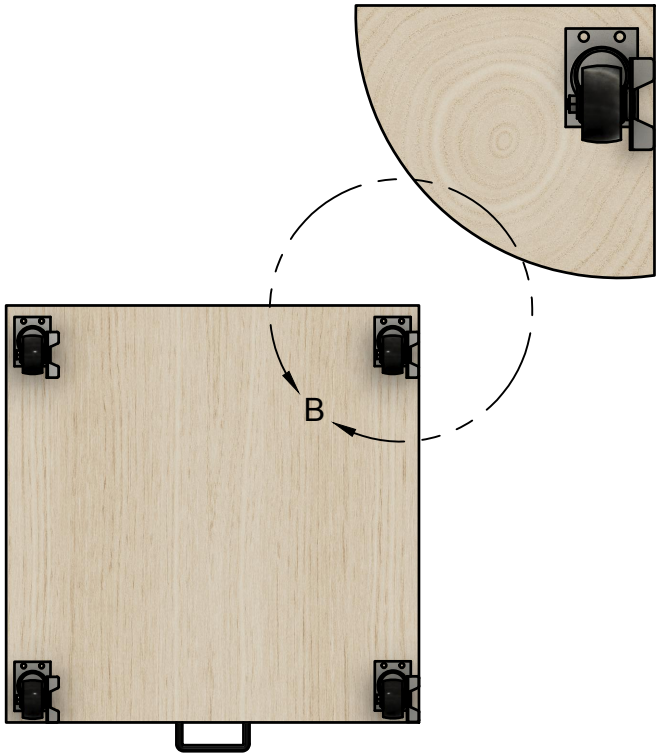


| | |
|---|---|
| DELL'S DIY INSPIRE • DESIGN • CREATE | Attach Base and Casters |
| | Dust Collection Cart |
| dellsdiy.com @dellsdiy | SCALE 1:10 DIMENSIONS: Inches SHEET 10/20 |

**Copyright 2021, Dell's DIY**

**Step 6:** Next we'll mark a line around the inside of the cart which will line up with the top edge of our shelf.

Measure 9 $\frac{5}{16}$" (shown as 9.313" in sketch below) down from the top edge of the sides and back. Connect your marks with a straight edge on each side.

Do the same on the outside of the sides to use as a reference line when screwing in the shelf.

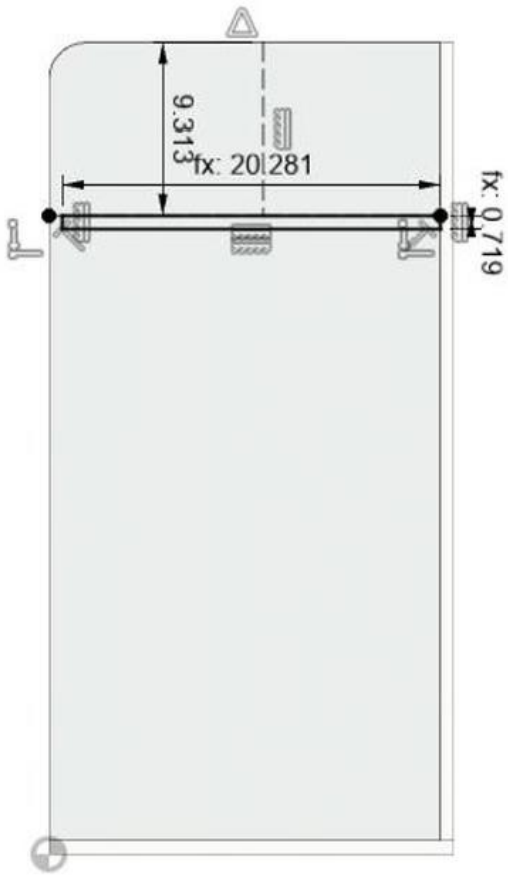


**Step 7:** Apply glue to the three sides of the top shelf (not the front edge yet). Using the inside guide lines as reference, slide in the top shelf aligning the top edges with the guide lines all around the inside of cart.

**Step 8:** Attach the shelf by drilling countersunk holes just below the outside reference line and attach using 1 $\frac{1}{4}$" screws. If you have a Brad nailer, it's helpful to secure the shelf with a couple nails to keep it from moving while drilling and screwing.

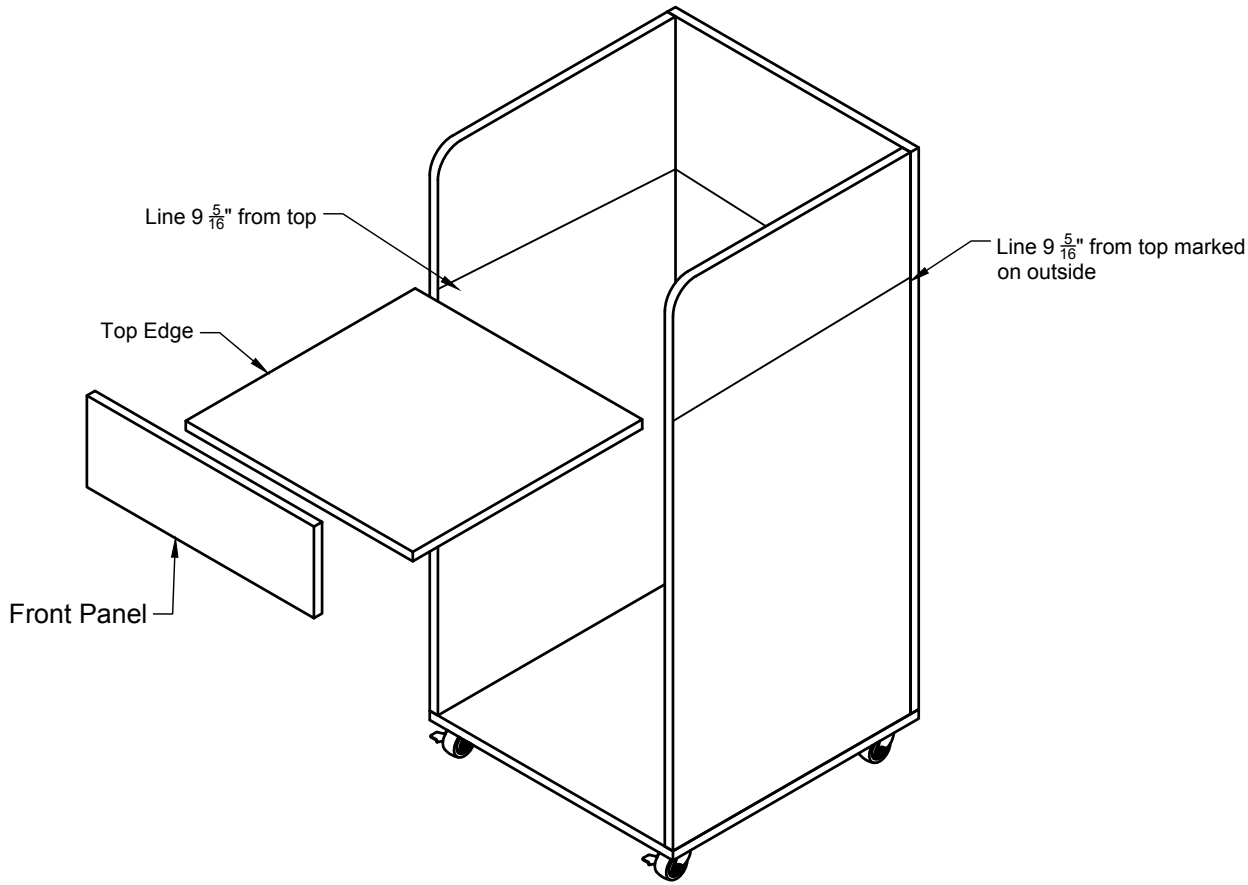


**Step 9:** Attach the front panel so the bottom edge is flush with the bottom of the shelf. Since this is a false drawer front and is meant to keep items from rolling off the shelf, I found only glue was sufficient but tacking with brad nails could be added for further strength.

| | |
|---|---|
| DELL'S DIY INSPIRE • DESIGN • CREATE | Install Top Shelf with Front Face |
| | Dust Collection Cart |
| dellsdiy.com @dellsdiy | SCALE 1:12 DIMENSIONS: Inches SHEET 11/20 |

Copyright 2021, Dell's DIY

This drawer construction is simple, strong, and perfect for use in shop furniture. Pocket holes and screws are often used in drawer box construction because they provide a very solid joint and doesn't require advanced woodworking techniques like dovetails or rabbet joints. The bottom is glued and nailed (or screwed) directly to the bottom of the drawer sides and does not require a dado slot on the sides to accept a drawer bottom.

The following pages will walk you through the steps to assemble the drawer.

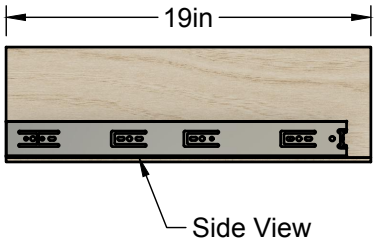


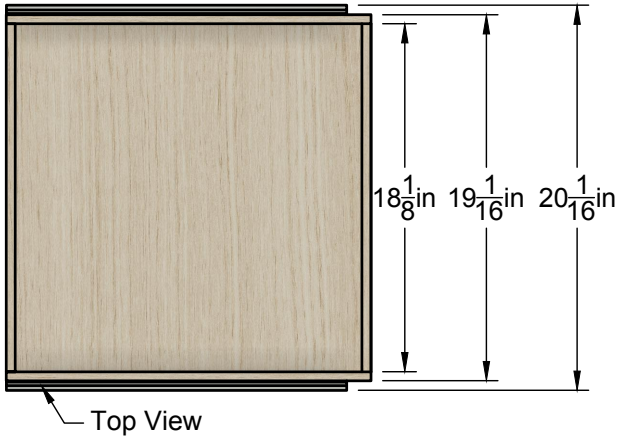


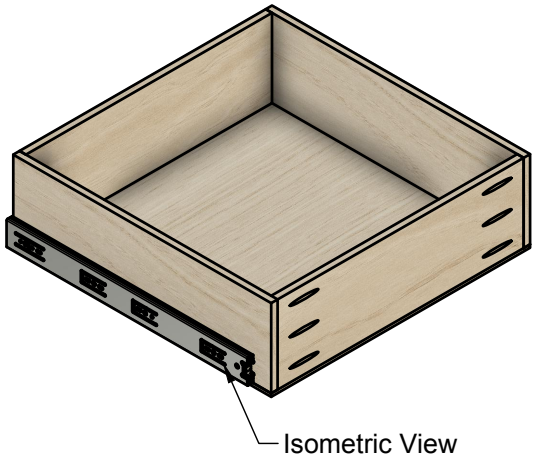


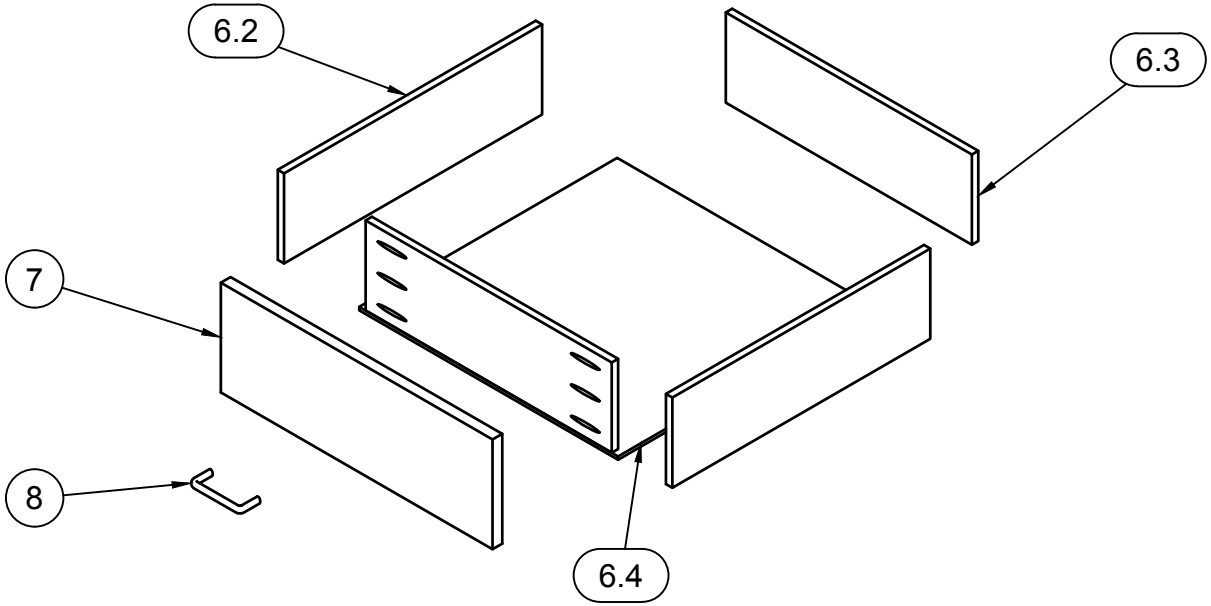


| PARTS LIST | | |
|---|---|---|
| ITEM | QTY | PART NAME |
| 6 | 1 | DRAWER ASSEMBLY |
| 6.2 | 2 | DRAWER SIDE |
| 6.3 | 2 | DRAWER FRONT/BACK |
| 6.4 | 1 | DRAWER BOTTOM |
| 7 | 1 | DRAWER FACE |
| 8 | 1 | DRAWER PULL |

DELL'S DIY
INSPIRE • DESIGN • CREATE

# Drawer Assembly - Page 1

## Dust Collection Cart

dellsdiy.com @dellsdiy | SCALE 1:12 | DIMENSIONS: Inches | SHEET 12/20

**Copyright 2021, Dell's DIY**

**Step 1:** Confirm your interior dimensions of cart and cut out drawer sides/front/back. The drawer dimensions have to be precise or you will have issues with the drawer slides binding when installed. See the quick tip on sheet 4 regarding measuring the interior dimensions and calculation for drawer width.

**Step 2:** Using a pocket hole jig (I'm using the Kreg K4), drill 3 pocket holes on the left and right side of the front and back drawer parts. Please refer to your pocket hole jig's instructions for proper setup regarding bit depth, material thickness, etc.

If you just have to have a Kreg Jig base station with storage like mine pictured below, you're in luck! Check out my website for build video and plans, sorry, selfish plug.

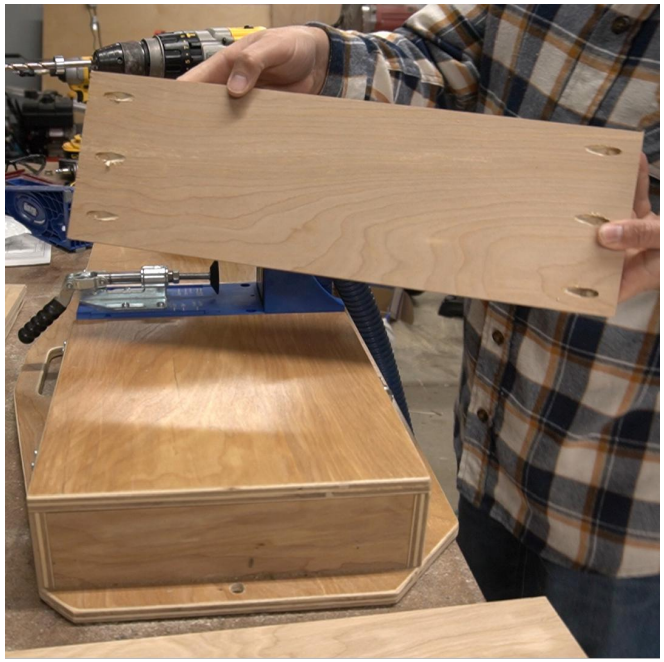

**Step 3:** Begin to assemble the drawer using one side and one front/back piece.

a. The sides will attach to the outside edge of the front/back piece (see detail view A). Pocket holes should face outward.
b. Apply glue to the edge of front board
c. Attach using 3 pocket hole screws. A corner clamp, like the Kreg clamp in picture below, makes it easy to ensure corners are square and pieces are held in place while inserting screw

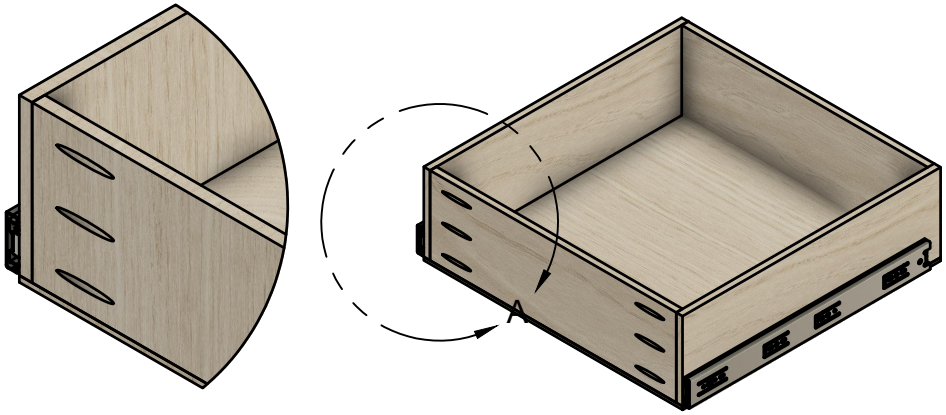


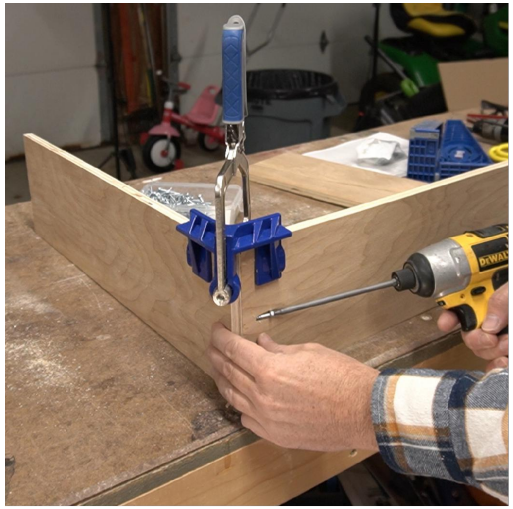

| | |
|---|---|
| DELL'S DIY INSPIRE • DESIGN • CREATE | Drawer Assembly - Page 2 |
| | Dust Collection Cart |
| dellsdiy.com @dellsdiy | SCALE 1:10 DIMENSIONS: Inches SHEET 13/20 |

Copyright 2021, Dell's DIY

**Step 4:** Attach the remaining sides using same method as Step 3 until all four sides are glued and screwed together..

**Step 5:** Confirm that your 4 corners are square (if off a little, you'll be able to correct when attaching the bottom). Lay the drawer bottom onto the box and confirm all edges are flush with the drawer box. Apply glue to drawer box edges and lay drawer bottom on top. Using a nail gun and/or countersunk screws, attach bottom. If drawer box is slightly out of square, work around the bottom with your nails or screws where you can apply pressure to a side to straighten it out and lock that square angle in with a nail or screw on the opposite corner.

Quick Tip: If you own a router and a flush trim bit, cut the drawer bottom slightly larger on all sides and use the flush trim bit to to cut bottom to perfect fit.

| | |
|---|---|
| DELL'S DIY INSPIRE • DESIGN • CREATE | Drawer Assembly - Page 3 |
| | Dust Collection Cart |
| dellsdiy.com @dellsdiy | SCALE 1:8 DIMENSIONS: Inches SHEET 14/20 |

Copyright 2021, Dell's DIY

**Drawer Slides 101**

Installation of drawer slides will vary based on style and options of the slides. The slides used here are ball bearing full extension slides and are made up of 3 parts;

1. The Cabinet Member which mount to the stable or grounded part of the cabinet, ie the cabinet box
2. The Drawer Member which connects to the moving component, ie the drawer
3. The Intermediate Member which connects the Cabinet Member and the Drawer Member.

(visit the Amazon link from page 2 of these plans or my website to purchase what I've found to be the best drawer slides at a great price)

Most ball bearing drawer slides will have a release lever which allows the drawer member to be removed from the intermediate member allowing for easier installation and removal of the drawer from the cabinet once installed.

There are typicaly two ways to configure a drawer installation depending on the look you're after.

1. An overlay drawer is where the drawer front overlaps the sides of the cabinet. In this type of installation, the front of the cabinet member of the drawer slide will be installed flush with the edge of the cabinet side.
2. An inset drawer is where the drawer front is inset in the drawer opening meaning the face is flush, or even, with the edges of the cabinet sides (This is how we will be installing the drawer in this project). This installation requires we setback the front of the cabinet member by the thickness of the drawer face..

Note: If you'd like to save some money and don't mind a lower quality drawer slide, you can buy roller slides which have a cabinet member and drawer member and instead of moving on ball bearings, roll on a roller wheel. The same steps can be used to install roller slides but thickness of slides may affect the requried dimensions of your drawer box.

| | |
|---|---|
| DELL'S DIY INSPIRE • DESIGN • CREATE | Installing Drawer Slides-Page 1 |
| | Dust Collection Cart |
| dellsdiy.com @dellsdiy | SCALE 1:8 DIMENSIONS: Inches SHEET 15/20 |

Copyright 2021, Dell's DIY

## Marking Alignment Lines

There are many different ways to attach the drawer slides. Since we only have a single drawer, this method will be the most simplistic If you've watched the build video, you'll notice these steps differ from the video. These steps below will be much easier and don't require additional tools to be purchased.

**Step 1:** Measure up from the bottom of the drawer 1.25" and draw a line across the left and right drawer sides. This will be used as a centerline to align the drawer member.

**Step 2:** Measure down from the bottom of the top shelf 5.25" and make a line across the inside of both sides (Second side removed from image below just for visual purposes). This is the centerline we will use to align the cabinet member. Since this drawer is inset, we need to mark the thickness of the drawer face from the front edge of the side, in this case it's $\frac{3}{4}$" plywood (actual thickness is $\frac{23}{32}$, as shown as .719" in drawing below). Take a scrap piece of your ply to mark exact thickness from front edge.

This setback will be used to align the front of the cabinet member during installation of the slides.

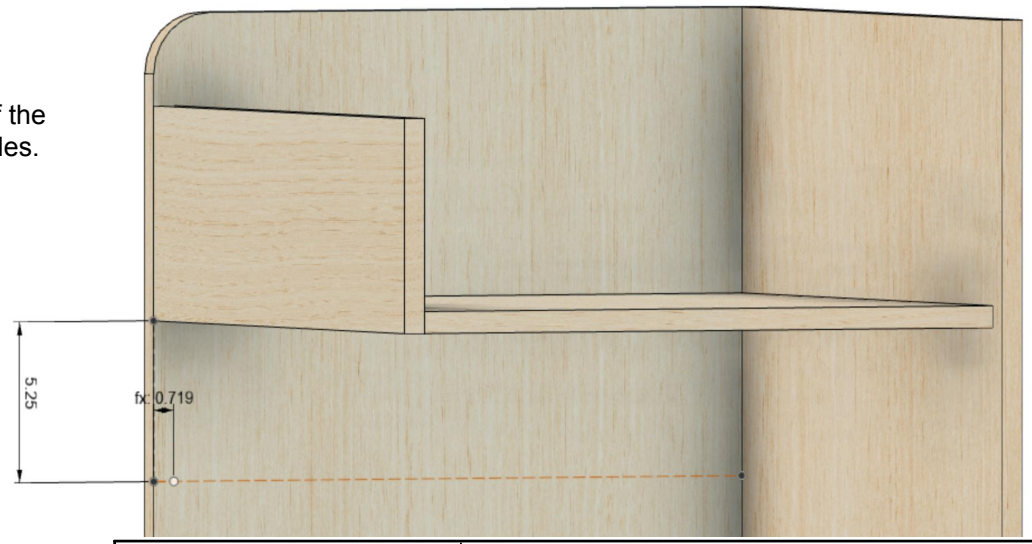


| | |
|---|---|
| DELL'S DIY INSPIRE • DESIGN • CREATE | Installing Drawer Slides-Page 2 |
| | Dust Collection Cart |
| dellsdiy.com @dellsdiy | SCALE 1:5 DIMENSIONS: Inches SHEET 16/20 |

Copyright 2021, Dell's DIY

## Installing Cabinet Member

**Step 3:** Now you're ready to install the Cabinet Member of the slide to the cabinet side. Drawer slides typically have horizontal and vertical slotted holes to allow for adjustments at the end of the install. For the cabinet member, you can use the hoizontal slots to allow for depth adjustments if needed.

a. If your slides have a release lever, separate the drawer member from the intermediate member. Put the drawer member aside for drawer installation in Step 4.
b. Align the front of the Cabinet Member with the setback line drawn in Step 2. The centerline, should run directly through the center of the holes/slots front to back. Using appropriate screws for your slides, fasten the cabinet member in the center of three of the horizontal slots (or three of the screw holes if your lines are perfect and you're feeling lucky :) ). It is very important this is installed level. Use a bubble level on top of the slide or measure the distance from the slide to the bottom of top shelf on front and back and ensure measurement is identical.

Note: If you're using ball bearing slides, you will need to slide out the intermediate member to access the screw holes on the Cabinet Member.

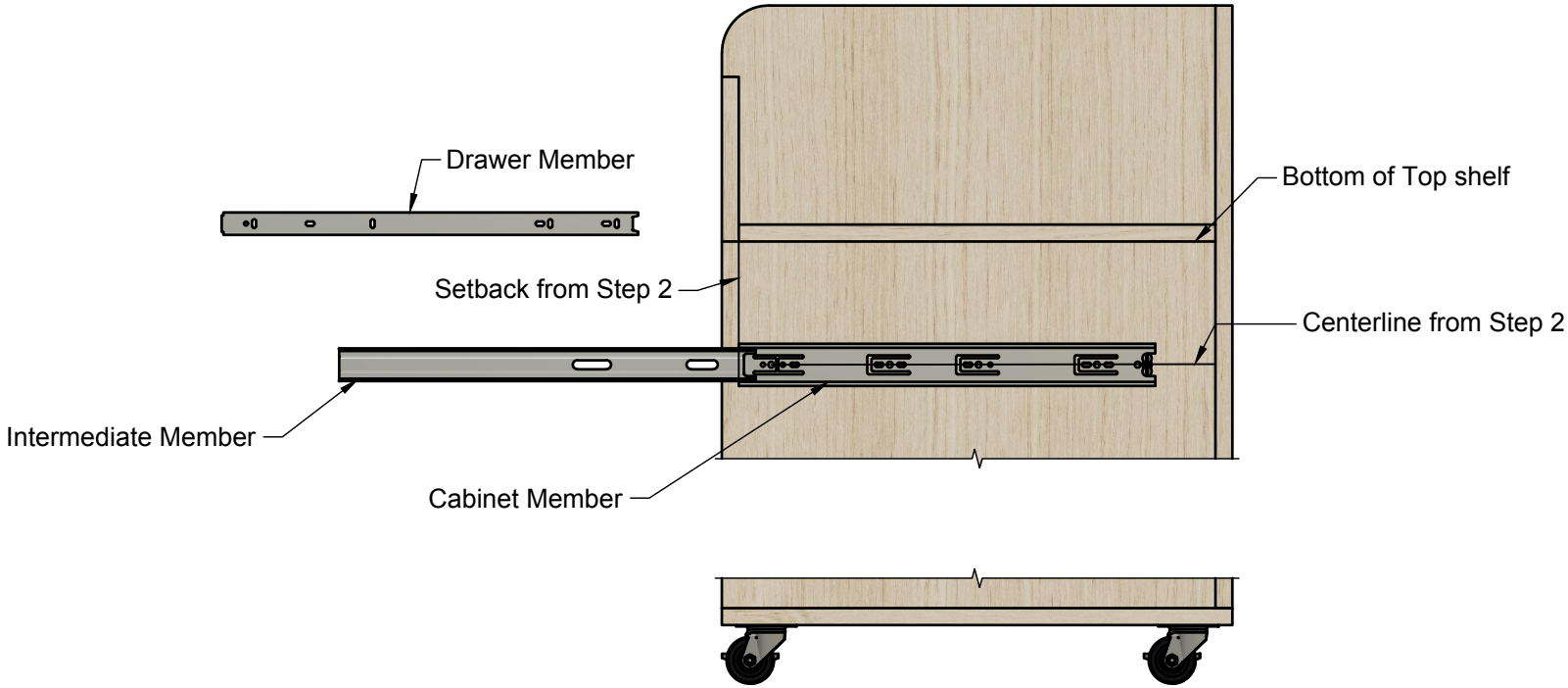


| | |
|---|---|
| DELL'S DIY INSPIRE • DESIGN • CREATE | Installing Drawer Slides-Page 3 |
| | Dust Collection Cart |
| dellsdiy.com @dellsdiy | SCALE 1:10 DIMENSIONS: Inches SHEET 17/20 |

Copyright 2021, Dell's DIY

## Installing Drawer Member

**Step 4:** Installing the Drawer member on a releasing ball bearing slide is fairly straightforward by simply aligning the front of the drawer member to the front of the drawer and, using the center line we drew in step 1, the line should go through the center of the screw holes / hole slots.

Again, ensuring level is important. Using either a bubble level or measuring the distance from the bottom of the drawer member to the bottom of the drawer (front and back of slide) is equal.

Once aligned, fasten drawer member to drawer using either the screw holes or in the center of the vertical slots (allows for height adjustment at the end of install process).

Follow the same process for the other drawer member on other side of drawer.
Note: Drawer face is not installed yet as shown in picture below.

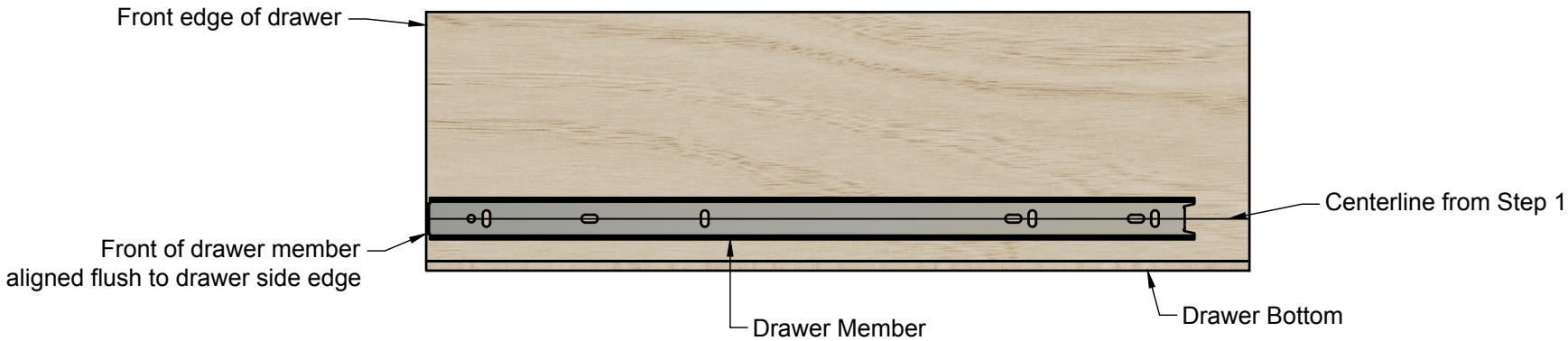


## Insert Drawer and Adjustments

Now that all of the slide members are attached, you can insert the drawer into the cabinet. Simply insert the Drawer Member into the Intermidiate Member and push the drawer closed. There will be some resistance when pushing in the drawer the first time since the Drawer Member has to relock with the Intermediate Member. Pull the drawer out once again and it should open and close smoothly

If it feels like something is binding, now is the time to make some adjustments. If the drawer looks crooked in the cabinet and you used the vertical screw slots, loosen the screws on the Drawer Members and tighten once drawer is back to level (This will also help with binding issues).

Push the drawer all the way in and take your Drawer Face and temporarily place against drawer front. If edges of Drawer Face stick out past the side edges or sit inside the cabinet, loosen the the cabinet member screws placed in the horizontal slots and adjust in or out accordingly.

Once the alignment is set, tighten all screws and add additional screws in the screw holes in the Drawer / Cabinet Members to lock in the slide placements.



**Copyright 2021, Dell's DIY**

Installing the drawer face seems like it should be a fairly simple task, and it is, but I want to share a "quick tip" for this. If you haven't seen the build video on YouTube (link on sheet 2), I highly recommend watching it. I'll do my best to explain.

a. Once you decide where you want your drawer handle to be placed, drill the holes in the drawer face. We will use these holes to secure the drawer face to the drawer temporarily.
b. Grab a deck of playing cards.
c. Place the drawer front tight against the left side of the cabinet and fill the gap on the right side with as many cards that will fit. See image 1 below.
d. Separate that stack of playing cards into equal halves.
e. Place the drawer face back into the opening and put half of the cards on the left side and half on the right side. Your drawer face is now centered side to side.
f. To create the same spacing on the top, take the same number of cards as each side, and place on the top left and right sides. See image 2 below. You now have an equal space (called a reveal) on all sides of the drawer face.
g. Using wood screws, screw the drawer face to the drawer through the holes drilled for the handle.
h. Pull the drawer out and secure the drawer face from inside the drawer using wood screws, two screws on top and two on bottom. See image 3
i. Remove your temporary screws from the handle holes, drill your handle holes through the drawer, and install your handle.
j. Give the playing cards back to your grandmother (or brother, mom, aunt, uncle, etc)

Image 1

Image 2

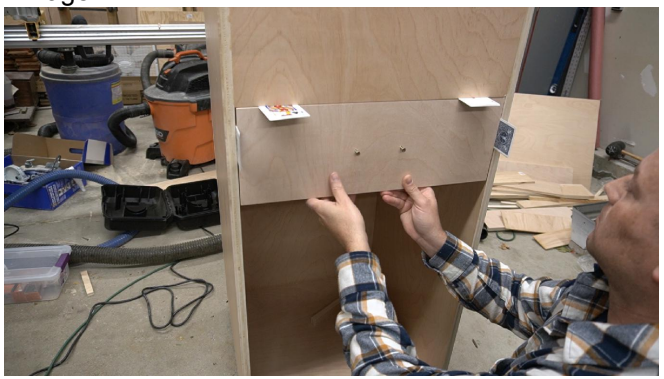

Image 3

| | |
|---|---|
| DELL'S DIY INSPIRE • DESIGN • CREATE | Installing Drawer Face |
| | Dust Collection Cart |
| dellsdiy.com @dellsdiy | SCALE 1:4 DIMENSIONS: Inches SHEET 19/20 |

All that's remaining is drilling a hole in either the top shelf or back side to feed the vacuum plug through and adding whatever accessories you'd like.

I have added  a power strip and an automated switch box (see links to products).

The automated switch box allows the vacuum to automatically turn on when a power tool is turned on.  The added power strip allows multiple power tools to be plugged in and turn the vacuum on to reduce trips back and forth to the cart.

I also found using a remote control outlet to be very handy if I'm not using a power tool, like when vacuuming the floor or cars, and can turn the vac on /off from a distance.

Adding a couple hooks on the sides to hold the various hoses with hose wraps also is very convenient.  See links for heavy duty large wraps

Heavy Duty Power Block

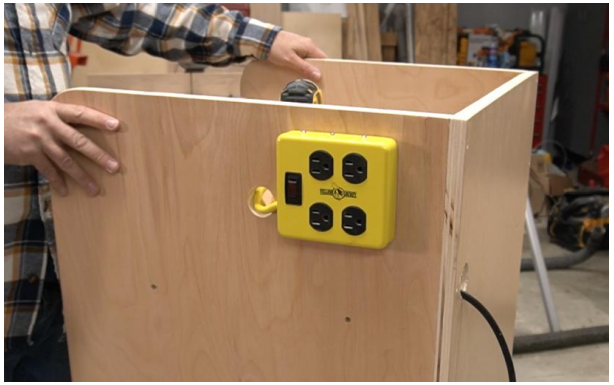

Automated Vacuum Switch

| | | |
|---|---|---|
| DELL'S DIY INSPIRE • DESIGN • CREATE | Adding Accessories | |
| | Dust Collection Cart | |
| dellsdiy.com @dellsdiy | SCALE | DIMENSIONS: Inches | SHEET 20/20 |